SDS-550 Sample Dilution System
Operator's Manual

Product Warranty Statement

SD Acquisition, Inc., DBA CETAC Technologies ("CETAC") warrants any CETAC unit manufactured or supplied by CETAC for a period of twenty five (25) months from the date of shipment. Units found in the reasonable judgment of CETAC to be defective in material or workmanship will be repaired or replaced by CETAC without charge for parts and labor. CETAC reserves the right to change or improve the design of any unit without assuming any obligation to modify any unit previously manufactured.

This warranty does not cover any unit that has been subject to misuse, neglect, negligence, or accident. The warranty does not apply to any damage to the unit that is the result of improper installation or maintenance, or to any unit that has been operated or maintained in any way contrary to the instructions specified in the CETAC instruction and operation manual. Operation of the CETAC unit inside a laboratory fume hood is contra-indicated and will void the warranty. Any attempt to repair or alter any CETAC unit by anyone other than by CETAC authorized personnel or agents will void this warranty. If any non-CETAC component is installed in the CETAC manufactured unit without the approval of CETAC, the warranty will be voided. In addition, this warranty does not extend to repairs made necessary by the use of parts, accessories or fluids which are either incompatible with the unit or adversely affect its operation, performance or durability. CETAC's obligation under this warranty is strictly and exclusively limited to repair or replacement of defective CETAC parts and no claim of breach of warranty shall be cause for cancellation or rescission of the contract of sale of any unit.

The foregoing express warranty is in lieu of all other warranties, expressed or implied, including warranties of merchantability and fitness for a particular purpose. CETAC shall not be bound by any representations or statements on the part of its employees or agents whether oral or in writing and including any made in catalogues and other promotional material including technical details and specifications except where such representations and statements are expressly made part of this contract. CETAC assumes no responsibility for incidental, consequential or other damages, even if advised of such a possibility, including but not limited to loss or damage of property, loss of revenue, loss of use of the unit, loss of time, or inconvenience. CETAC's liability on any claim for loss or damage arising out of the sale, resale or use of any of its products shall in no event exceed the selling price of the unit.

Purchaser shall indemnify CETAC against any claim or liability which may be asserted as relates to the following: (i) the use to which any product supplied hereunder is put infringes the patent, copyright or other intellectual property rights of any third party; or (ii) any liability resulting from the failure by Purchaser to observe the terms of this Warranty.

Returned Product Procedures

Claims for shipment damage (evident or concealed) must be filed with the carrier by the buyer. CETAC must be notified within ninety (90) days of shipment of incorrect materials. No product may be returned, whether in warranty or out of warranty, without first obtaining approval from CETAC. No replacements will be provided nor repairs made for products returned without such approval. Any returned product must be accompanied by a return authorization number. The expense of returning the unit to CETAC for service will be paid by the buyer. The status of any product returned later than thirty (30) days after issuance of a return authorization number will be subject to review. Shipment of repaired products will generally be made forty eight (48) hours after the receipt.

Products may not be returned which are contaminated by radioactive materials, infectious agents, or other materials constituting health hazards to CETAC employees.

Returned Product Warranty Determination

After CETAC'S examination, warranty or out of warranty status will be determined. If a warranted defect exists, the product will be repaired at no charge and shipped prepaid back to the buyer. If the buyer desires an air freight return, the product will be shipped collect. Warranty repairs do not extend the original warranty period.

If an out of warranty defect exists, the buyer shall be notified of the repair cost. At such time the buyer must issue a valid purchase order to cover the cost of repair and freight, or authorize the products to be shipped back as is, at the buyer's expense. Failure to obtain a purchase order number approval within fifteen (15) days of notification will result in the products being returned as is, at the buyers expense.

COPYRIGHT

REPRODUCTION

 Requests for additional copies of this, or any other CETAC publication, can be filled by contacting an authorized distributor or

CETAC Technologies
Customer Service & Support
14306 Industrial Road
Omaha, Nebraska 68144, USA
Phone (800) 369-2822 (USA only)
Phone (402) 733-2829
Fax (402) 733-1932
E-mail custserv@cetac.com

REVISIONS

CETAC Technologies strives to provide the scientific community with an unparalleled combination of effective technology and continuing value. Modular upgrades for existing instruments will continue to be a prime consideration as designs progress.

CETAC Technologies reserves the right to revise this document and/or improve products described herein at any time without notice or obligation. Warranty registration entitles the named owner exclusively to manual change pages/new editions as they are published.

SAFETY

Instruments, accessories, components or other associated materials **may not** be returned to CETAC Technologies if contaminated with biohazard or radioactive materials, infectious agents, or any other materials and/or conditions that could constitute a health or injury hazard to CETAC employees. Call Customer Service and Support if there is any question or doubt relative to decontamination requirements.

CAUTION and WARNING statements, as applied in this document, shall be interpreted consistent with the following context: CAUTION applies only to potential property damage conditions; WARNING applies to potential personal injury conditions, in combination with or exclusive of potential property damage.

WARNING

The handling of organomercurial concentrates which may be used in the preparation of process standards presents a substantial (potentially lethal) safety hazard. Only an experienced, professionally trained organo-metallic chemist, knowledgeable and skilled specifically in the safe handling of organomercurials (using approved apparatus and approved protection measures in an approved facility) should attempt to prepare diluted organomercurial process standards from concentrates.

NOTE

SD Acquisition, Inc., DBA CETAC Technologies assumes no liability for the handling of organomercurial concentrates or the preparation, handling, or use of diluted organomercurial process standards. Instead, CETAC Technologies recommends use of appropriate standard reference materials to validate sample preparation (dissolution/digestion) and use of inorganic mercury standards for instrument calibration.

All user-serviceable components are specifically identified in this document as such; the balance shall be assumed to require the expertise of a factory service technician/engineer for adjustment, repair,

replacement, modification, etc. Others not so qualified and performing these actions shall do so at their own risk. Furthermore, never operate the instrument without first reading and understanding the *SDS-550 Sample Dilution System Operator's Manual* and ensuring that it is operated safely and properly.

ORIGINAL PACKAGING

Retain original factory packaging for moves and factory return shipments. Shipping in anything other than the original fitted foam and container can result in incidental damage from which the purchaser will not be protected under warranty.

WARNING

Under all conditions the user must observe safe laboratory procedures during the operation of this product.

FEDERAL COMMUNICATIONS COMMISSION (FCC) NOTICE

This equipment has been tested and found to comply with the limits for a Class A digital device, pursuant to Part 15 of the FCC Rules. These limits are designed to provide reasonable protection against harmful interference in a commercial installation.

This equipment generates, uses, and can radiate radio frequency energy and, if not installed and used in accordance with the instructions, may cause harmful interference to radio communications. Operation of this equipment in a residential environment is likely to cause harmful interference, in which case the user will be required to correct the interference at his own expense.

MODIFICATIONS

The FCC requires the user to be notified that any changes or modifications made to this device that are not expressly approved by CETAC Technologies may void the user's authority to operate the equipment.

CABLES

Connections to this device must be made with shielded cables with metallic RFI/EMI connector hoods to maintain compliance with FCC Rules and Regulations.

CANADIAN NOTICE

This digital apparatus does not exceed the Class A limits for radio noise emissions from digital apparatus as set out in the interference-causing equipment standard entitled "Digital Apparatus." ICES-003 of the Department of Communications.

AVIS CANADIEN

Cet appareil numerique respecte les limites de bruits radioelectriques applicables aux appareils numeriques de Classe A prescrites dans la norme sur le materiel brouilleur: "Appareils Numeriques," NMB-003 edictee par le ministre des Communications.

POWER CORD SET REQUIREMENTS

The power cord set supplied with your instrument meets the requirements of the country where you purchased the instrument.

If you use the instrument in another country, you must use a power cord set that meets the requirements of that country.

WARNING

This equipment is designed for connection to a grounded (earthed) outlet. The grounding type plug is an important safety feature. To reduce the risk of electrical shock or damage to the instrument, do not disable this feature.

WARNING

To reduce the risk of fire hazard and electrical shock, do not expose the unit to rain or humidity. To reduce the risk of electrical shock, do not open the cabinet. All maintenance is to be performed by an Authorized CETAC Service Provider.

Protection provided by the equipment may be impaired if the equipment is used in a manner not specified by the manufacturer.

CLEANING INSTRUCTIONS

To clean the exterior surfaces of the instrument, complete the following steps:

1 Shut down and unplug the instrument.

2 Wipe the instrument exterior surfaces only using a towel dampened with a lab-grade cleaning agent.

3 Repeat step 2, using a towel dampened with clear water.

4 Dry the instrument exterior using a dry towel.

WARNING

Do not allow any liquid to enter the instrument cabinet, or come into contact with any electrical components. The instrument must be thoroughly dry before you reconnect power, or turn the instrument on.

COOLING FAN OBSTRUCTION

The instrument cooling fan(s) shall remain unobstructed at all times. Do not operate the instrument if the cooling fan(s) are blocked or obstructed in any manner.

ENVIRONMENTAL

Operating Temperature:	10° to 30°C
Relative Humidity	0% to 95%

WARNING
FOR CONTINUED PROTECTION AGAINST RISK OF FIRE, REPLACE ONLY WITH FUSES OF THE SPECIFIED TYPE AND CURRENT RATING.

FOR CONTINUED PROTECTION AGAINST RISK OF FIRE, REPLACE ONLY WITH FUSES OF THE SPECIFIED TYPE AND CURRENT RATING.

⚠ AVERTISSEMENT

POUR UNE PROTECTION CONTINUÉ CONTRE LES RISQUES D'INCENDIE, REMPLACER UNIQUEMENT PAR DES FUSIBLES DE MÊME TYPE ET AMPÈRAGE.

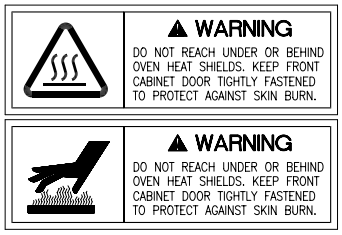

⚠ AVERTISSEMENT

NE PAS GLISSER LA MAIN SOUS OU DERIERE LES ECRANS THERMIQUES DU FOUR. GARDER LA PORTE D'ACCES AU DEVANT DU BOITIER BIEN FERMEE POUR ASSURER LA PROTECTION CONTRE LES BRULURES

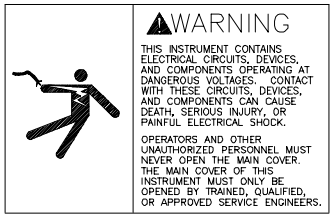

⚠ AVERTISSEMENT

TOUT CONTACT AVEC LES HAUTES TENSIONS PEUT ENTRAINER LA MORT OU DES BLESSURES SÉVÈRES. CE PANNEAU NE DOIT ÊTRE ENLEVE QUE PAR UN RÉPARATEUR QUALIFIÉ.

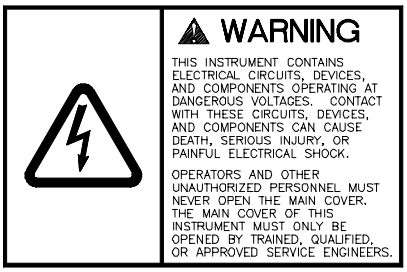

⚠ AVERTISSEMENT

TOUT CONTACT AVEC LES HAUTES TENSIONS PEUT ENTRAINER LA MORT OU DES BLESSURES SÉVÈRES. CE PANNEAU NE DOIT ÊTRE ENLEVE QUE PAR UN RÉPARATEUR QUALIFIÉ.

⚠ AVERTISSEMENT

TOUT CONTACT AVEC LES HAUTES TENSIONS PEUT ENTRAINER LA MORT OU DES BLESSURES SÉVÈRES. CE PANNEAU NE DOIT ÊTRE ENLEVE QUE PAR UN RÉPARATEUR QUALIFIÉ.

⚠ AVERTISSEMENT

TOUT CONTACT AVEC LES HAUTES TENSIONS PEUT ENTRAINER LA MORT OU DES BLESSURES SÉVÈRES. CE PANNEAU NE DOIT ÊTRE ENLEVE QUE PAR UN RÉPARATEUR QUALIFIÉ.

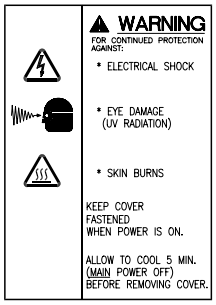

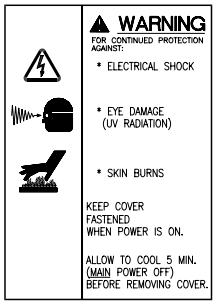

⚠ AVERTISSEMENT

POUR LA PROTECTION PERMANENTE CONTRE UN CHOC ÉLECTRIQUE, UNE BRÛLURE DES YEUX (RADIATION UV) OU DE LA PEAU, LAISSER LE COUVERCLE HERMÉTIQUEMENT FERMÉ LORSQUE L'APPAREIL EST SOUS TENSION.
LAISSER REFROIDIR 5 MINUTES (APPAREIL ÉTEINT) AVANT D'ENLEVER LE COUVERCLE.

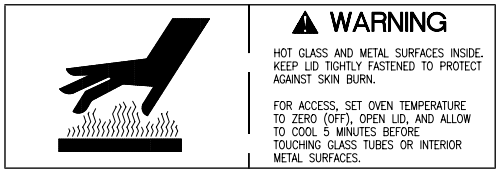

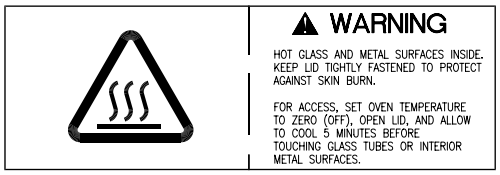

⚠ AVERTISSEMENT

SURFACES CHAUDES, LAISSER LE COUVERCLE HERMÉTIQUEMENT FERMÉ.
POUR ACCÉDER, METTRE LA TEMPÉRATURE DU FOUR À ZÉRO, OUVRIR LE COUVERCLE ET LAISSER REFROIDIR 5 MINUTES AVANT DE TOUCHER LA VERRERIE OU TOUTE SURFACE MÉTALLIQUE INTÉRIEURE.

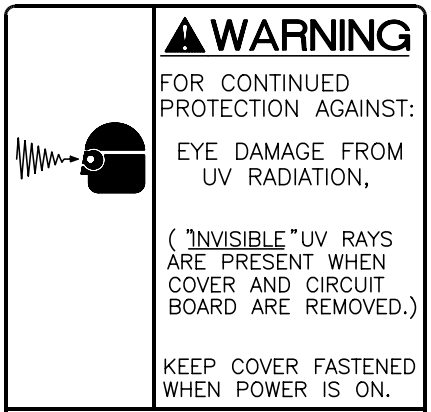

⚠ AVERTISSEMENT

POUR UNE PROTECTION ININTERROMPUE CONTRE LES RISQUES DE DOMMAGES AUX YEUX (DES RAYONS UV "INVISIBLES" SONT PRÉSENTS LORSQUE LE COUVERCLE AINSI QUE LA CARTE DE CIRCUIT SONT ENLEVÉS). LAISSER LE COUVERCLE EN PLACE LORSQUE L'APPAREIL EST EN MARCHE.

Contents

Contents

Preface

Preface

The *SDS-550 Sample Dilution System Operator's Manual* explains the procedures for installing, using, and maintaining the SDS-550 System. It also provides information about troubleshooting SDS-550 problems and describes the design of the Auto Sampler and the Dilution Module.

Who Should Read This Book

The primary audience for the *SDS-550 Sample Dilution System Operator's Manual* consists of analytical chemists and lab technicians. To use this manual effectively, you should have a strong knowledge of chemistry, a basic knowledge of electronic sampling equipment, at least a beginning level of computer experience, and working knowledge of an ICP-AES or ICP-MS.

How to Use This Book

The *SDS-550 Sample Dilution System Operator's Manual* contains seven chapters. You should read the chapters sequentially the first time. Thereafter, refer to the chapters separately as needed.

This manual contains the following chapters:

Chapter 1, "Introduction," provides you with an overview of the SDS-550 System's function and design.

Chapter 2, "Preparing for Installation," discusses space and power requirements that must be met before the SDS-550 System is installed. It also provides instructions for unpacking the Auto Sampler and the Dilution Module.

Chapter 3, "Installing the SDS-550 System," provides step-by-step procedures for installing the SDS-550.

Chapter 4, "Verifying Installation," explains how to test the communications interface between the SDS-550 and the host computer. It also explains how to check Auto Sampler components and test the sample probe and Dilution Module.

Chapter 5, "Using the SDS-550 System," describes the tasks you perform during daily operation of the SDS-550.

Chapter 6, "Maintaining the SDS-550 System," explains daily, weekly, and periodic maintenance tasks.

Chapter 7, "Troubleshooting the SDS-550 System," describes how to diagnose and correct SDS-550 problems.

These chapters are followed by a glossary of related terms.

Conventions Used in This Book

This book uses certain conventions to easily distinguish different types of information easily. This section describes these conventions.

Instructions

All step-by-step instructions are numbered and in bold, as in the following example.

1 **Replace the sample vial racks.**

Many numbered instructions are followed by more detailed explanations.

Menu Items

This book uses the following format for referring to software menu items:

File»Open Method

The text before the arrow symbol is the name of the menu; the text after the arrow symbol is the menu choice.

Terminology

This book frequently uses the following terms:

SDS-550	The SDS-550 Sample Dilution System.
Host computer	The computer that controls operation of the SDS-550 System.
Hz	Hertz.
ID	Inside diameter.
LED	Light-emitting diode.
PEEK	Polyetheretherketone.
PTFE	Polytetrafluoroethylene.
VAC	Volts alternating current.
VDC	Volts direct current.
X-axis	The left-to-right axis of the Auto Sampler.

Y-axis The front-to-back axis of the Auto Sampler.

Z-axis The up-and-down axis of the Auto Sampler.

Notes

Notes contain a reminder about the effect of particular actions. They are indicated as follows:

> **Note:**
>
> This example shows how a note is displayed.

Cautions

Cautions indicate situations that require immediate attention to prevent harm to the SDS-550 System. Cautions are indicated as follows:

CAUTION This example shows how a caution is displayed.

Warnings

Warnings indicate situations that could cause bodily harm. Warnings are indicated as follows:

WARNING **This example shows how a warning is displayed.**

Where to Go for More Information

In addition to the *SDS-550 Sample Dilution System Operator's Manual*, you can refer to the following resources:

- CETAC Technologies Customer Service and Support:

  Phone: 1 (800) 369-2822 (USA only)

  Phone: 1 (402) 733-2829

  Fax: 1 (402) 733-1932

  E-Mail: custserv@cetac.com

1

Introduction

Introduction

The SDS-550 Sample Dilution System is designed to be sturdy, reliable, and easy to use. It provides automated sample dilution that enables you to perform other tasks while the SDS-550 runs. The SDS-550 can automatically process up to 180 samples when fully loaded. It contains a microprocessor that allows sequential or random sample dilution, providing flexibility.

The SDS-550 System is typically controlled by a host computer using a serial communications protocol. Computer requirements are given later in this chapter. A picture of an SDS-550 System (Auto Sampler plus Dilution Module) is shown below in Figure 1-1.

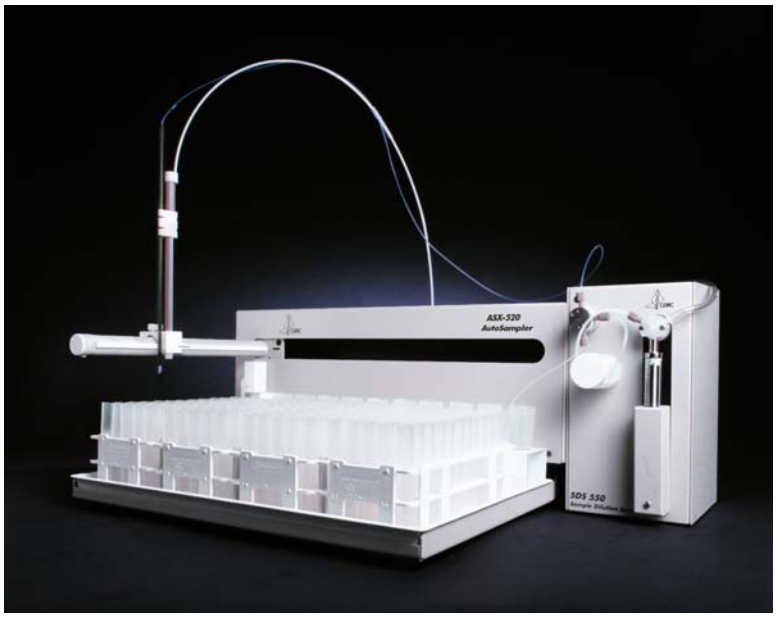

Figure 1-1. SDS-550 System (Auto Sampler plus Dilution Module).

Auto Sampler Standard Components

Auto sampler components are made of corrosion-resistant stainless steel alloys or anodized aluminum. The enclosure and base are made from a high-strength aluminum alloy that is chromated and finished with an epoxy powder coating.

The Auto Sampler (a CETAC ASX-520) operates reliably under a wide variety of conditions. Components in the sample flow path are made of polyetherimide (PEI) and polytetrafluoroethylene (PTFE). When these inert, non-metallic materials are used at temperatures less than 135°C, they can withstand repeated exposure to the following substances:

- predominantly aqueous solutions of strong acids (less than 40%)
- predominantly aqueous solutions of strong bases (less than 10%)
- common organic solvents such as acetone, alcohols, ethyl acetate, methylethylketone (MEK), petroleum oils and derived fuels, tetrachloroethylene, toluene, and xylene

CAUTION

Prolonged or repeated exposure to temperatures greater than 135 C and to the following substances can cause failure of the PEI flow path components:

- solutions of concentrated acids (greater than 40%)
- solutions of concentrated bases (greater than 10% potassium, ammonium, or sodium hydroxides)
- partially halogenated hydrocarbons or extremely aggressive organic solvents (chloroform, methylene dichloride, 1,1,2-trichloroethane)

Figure 1–2. Auto Sampler Design—Front View.

The following standard components are located on the front of the Auto Sampler. Each lettered item corresponds with a callout in Figure 1–2.

A **Sample tray.** The sample tray has 10 standard positions and accommodates up to 4 sample vial racks. Ribs located on the bottom of the sample tray hold the sample vial racks in place.

B **Sample vial racks.** The Auto Sampler includes four sets of sample vial racks. You can choose from five different rack sizes with either 21, 24, 40, 60 or 90 vial positions per rack. You can combine racks of different sizes. An optional tray insert may be acquired to accommodate Gilson style 14, 44, and 60 position vial racks.

C **Standards vials.** Ten standards vials are included with the Auto Sampler. The standards vials, which fit into the standards positions at the back of the sample tray, are 50-milliliter conical centrifuge tubes with caps. Reagent solutions may be stored in these vials and held in the standards positions at the rear of the sample tray until needed to refill the reagent vessel.

D **Flowing rinse station.** The rinse station is located in the extreme left position at the back of the sample tray. It comes with tubing used to connect the rinse station to the rinse source and the waste container.

E **Z-drive assembly.** The z-drive assembly includes a slider block and guide plate as well as the sample probe. The z-drive assembly fits onto the Auto Sampler arm.

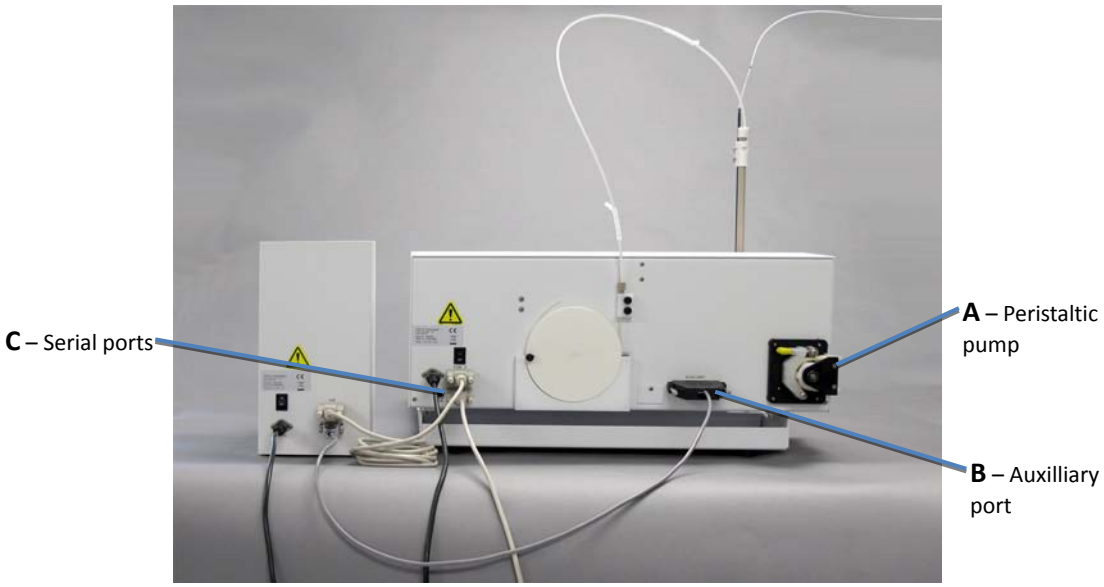

Figure 1–3. Auto Sampler Design—Back View.

The following standard components are located on the back of the Auto Sampler. Each lettered item corresponds with a callout in Figure 1–3.

A. **On-board two-channel peristaltic pump.** The on-board peristaltic pump is located in the lower right-hand corner on the back of the Auto Sampler. The pump moves the rinse solution from the rinse solution reservoir through the flowing rinse station.

B. **Input/output (I/O) auxiliary port.**

C. **Two RS-232 serial I/O ports (COM1 and Dilutor).** The serial ports are located on the left side of the back of the Auto Sampler. The COM1 port is the communications interface between the Auto Sampler and the host computer. The dilutor port connects the Auto Sampler to other external devices, such as the Dilution Module.

The following standard components are also shipped with the Auto Sampler:

- **External desktop power supply**. The input rating is AC 100V-240V, 1A, with an output of DC 24V, 1.7A. It contains a 2A, 250V fuse, which is not user replaceable. This same type of power supply is used for the Dilution Module.

- **Sample probe kit.** The kit includes the sample probe with sample tubing. The sample probe fits into the sample probe assembly. The i.d. of the sample probe tubing is 0.9 mm.

- **Serial interface kit.** The kit includes DB9F port adapters for host computers with normal AT-style DTE serial ports, and two 1.83-meter modular cables.

- **Solenoid control cable.** This 1.33 meter cable has DB37F and DB9M port adapters.

Dilution Module Standard Components

The Dilution Module consists of three main components: one 10-ml syringe, one three-way solenoid valve, and one 10 ml sample loop. The enclosure for the Dilution Module is also made from a high-strength aluminum alloy that is chromated and finished with an epoxy powder coating. The module operates reliably under a wide variety of conditions (as listed for the Auto Sampler) but with some important exceptions (see below). Components in the sample flow path are made of PTFE (polytetrafluoroethylene), Kel-F®[1], and glass. The following

[1] Kel-F is a registered trademark of the 3M Company.

materials (part of the syringe assembly) should not be exposed to the listed substances.

Kel-F®

- Bleach, ethanolamine, ethylenediamine, furfural, tetrahydrofuran, halogenerated solvents, mercuric cyanide, oxalic acid

Glass

- Any concentration of hydrofluoric (HF) acid

Caution

Liquid temperatures above 70°C (158°F) should not be introduced to the Dilution Module, as these temperatures may harm the solenoid valve.

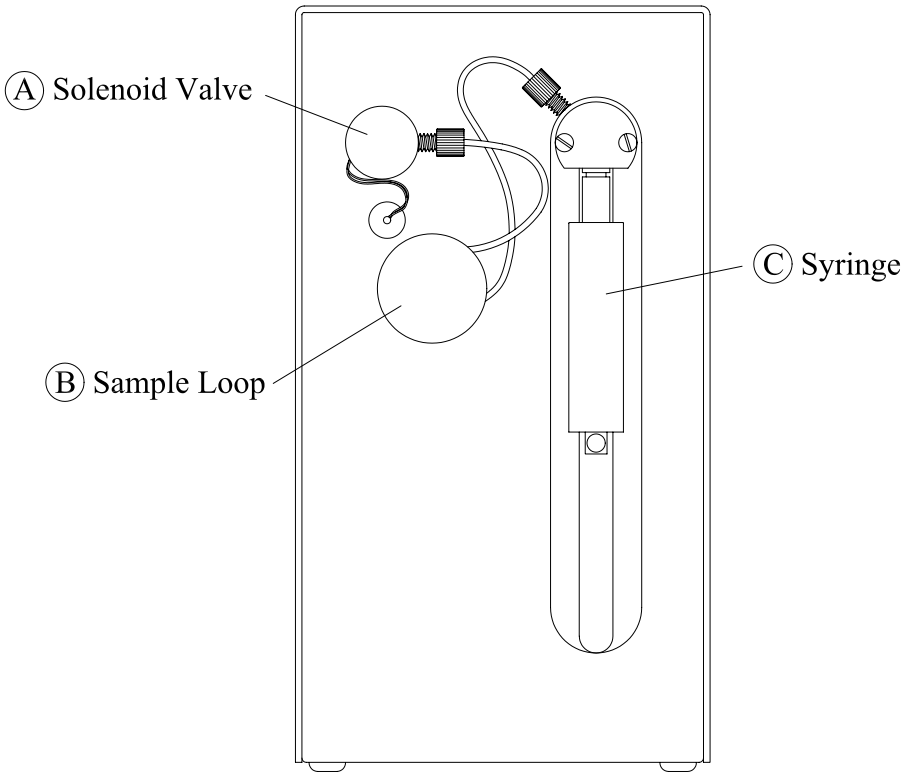

Figure 1-4. Dilution Module Design – Front View.

The following standard components are located on the front of the Dilution Module. Each lettered item corresponds with a callout in Figure 1-4.

A. **Solenoid Valve.** The three-way solenoid valve allows the addition of one reagent during dilution. Wetted surfaces are made of PTFE (polytetrafluoroethylene).

B. **Sample Loop.** The 10-mL sample loop, made from PTFE tubing, prevents sample from reaching and possibly contaminating the syringe.

C. **Syringe.** The 10-mL syringe will uptake sample, a reagent (if desired), and diluent solution. Wetted surfaces are made of Kel-F® and glass (see page 1-8 for a list of substances which should not be used with Kel-F® and glass).

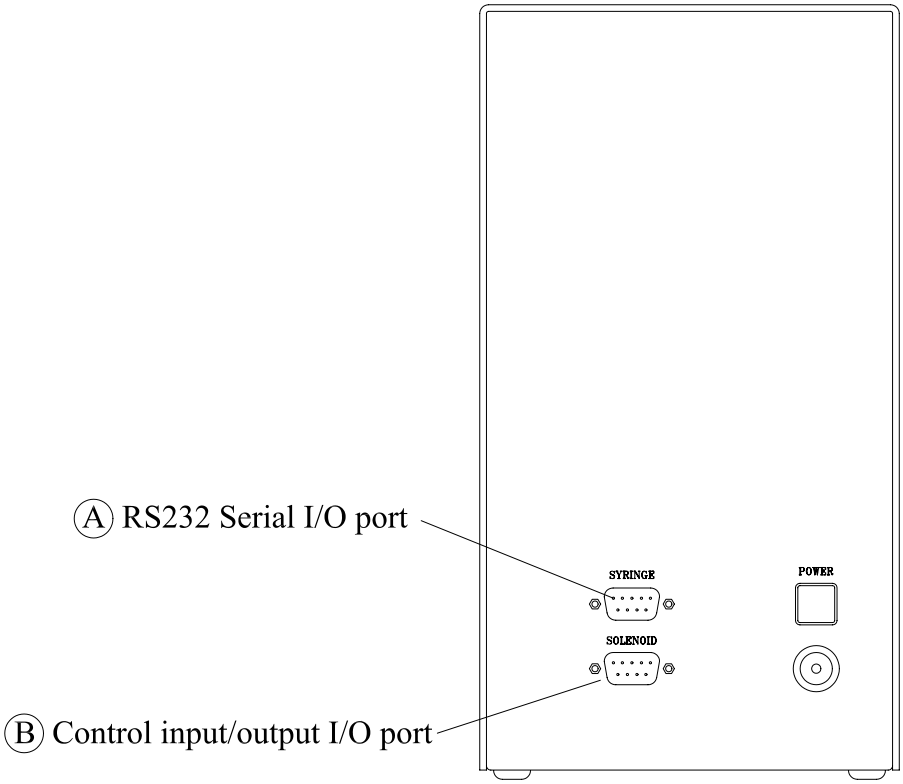

Figure 1-5. Dilution Module Design – Back View.

The following standard components are located on the back of the Dilution Module. Each lettered item corresponds with a callout in Figure 1-5.

A. **RS232 Serial I/O Port.** This is the upper of two parts located on the left side of the back of the Dilution Module. Control of the syringe is established through this port.

B. **Control Input/Output I/O Port.** This is the lower of two parts located on the left side of the back of the Dilution Module. Control of the solenoid valve is established through this port.

The following standard components are also shipped with the Dilution Module.

External desktop power supply. The input rating is AC 100V – 240V, 1A, with an output of DC 24V, 1.7A. It contains a 2A, 250V fuse which is **not** user replaceable. This same type of power supply is used for the Auto Sampler.

Computer Requirements

The SDS-550 System software is designed for flexibility and ease of use. The software is compatible with most Microsoft® operating systems, including Windows® 2000, Windows XP, Vista and Windows 7. The computer must have an available serial port for communication with the Auto Sampler and at least 1 GB of memory (2 GB for Windows 7).

Note:

Contact CETAC Technologies if you need additional accessories not listed, need added features to integrate the Auto Sampler into your analytical system, or have unique requirements. Research and development of new features and accessories for the SDS-550 System, often inspired by customer requests, is a continuing activity of CETAC Technologies.

2

Preparing for Installation

Preparing for Installation

Installing the SDS-550 System requires preparation. Before you install the SDS-550, you should evaluate the physical arrangement of the laboratory to choose a suitable location. Once you choose a location, you must carefully unpack the SDS-550 prior to beginning the installation.

This chapter discusses what requirements must be met when you choose a location for the SDS-550 System. It also describes how to unpack the SDS-550 before installation.

Choosing a Location

Choosing a location for the SDS-550 involves evaluating the lab environment for the availability of space, solutions, and power. For it to function optimally, the location you select must meet specific requirements associated with each of these items. The following sections discuss space, solution, and power requirements.

Space Requirements

The recommended minimum footprint for countertop installation of the SDS-550 System is 74cm W x 69cm D x 69cm H. Additional countertop space should be considered for the computer, depending on its dimensions (desktop or laptop).

Solution Requirements

For most applications, deionized water or dilute mineral acids (e.g. nitric acid) are used as rinse or diluent agents with the SDS-550 System. Any solutions should be placed within 2 meters of the SDS-550 System.

Ensure that there is a liquid waste receptacle within 2 meters of the SDS-550 System. The waste receptacle inlet should be at least 30 to 60 centimeters lower than the Auto Sampler rinse outlet.

Power Requirements

Place the SDS-550 within 1.2 meters of two or more power outlets. The Auto Sampler and Dilution Module input requirements are 110–240 VAC ±10%, 50/60 Hz, and 40 W. Voltage selection is automatic.

Both the Auto Sampler and Dilution Module use an external desktop power supply. The input rating is AC 110V-240V 1A with an output of DC 24V 1.7A. It contains a 2A 250V fuse which is not user replaceable.

Make sure you position the SDS-550 so that the location where the power supply cords plug into is easily accessible (is not blocked). You should be able to readily disconnect the power cords if necessary.

Power sockets are located on the back of the Auto Sampler and Dilution Module, below the red-colored power switch. Connect the individual power supplies to the Auto Sampler and the Dilution Module first, and then connect the line cords to the respective wall power outlets. Do not apply power to the power supply until you are ready to operate the entire SDS-550 System (Auto Sampler and Dilution Module).

Unpacking the SDS-550 System

Inspect external packaging upon receipt for holes, tears, smashed corners, or any other outward signs of damage from rough handling or abuse during shipment. Inspect all items during unpacking and notify the carrier immediately of any concealed damage.

If the SDS-550 is shipped or removed from storage during cold weather, allow the packaged equipment to attain room temperature before opening and exposing to warm, humid air. It is usually sufficient to provide 4 to 8 hours for this purpose.

CAUTION

If condensation forms on or inside the Auto Sampler and/or Dilution Module, allow it to dry thoroughly before connecting it to a power source and operating it. Failure to do so may cause equipment damage.

Remove the packing checklist from the shipping container, and check off items against it. Leave accessories in the packing until you are ready to install them on the SDS-550 System.

Note:

Do not throw away the factory packaging. Keep it for possible future use. This is one of the warranty conditions.

3

Installing the SDS-550 System

Installing the SDS-550 System

The SDS-550 System is designed for easy installation. Installation consists of two parts: assembling and connecting the autosampler to the dilution module, and establishing communication to a host computer.

Note:

For the most part, you can install the SDS-550 without using tools. In fact, using tools such as screwdrivers or pliers to perform most installation tasks is likely to result in a damages or unusable instrument. You can remove thrumbscrews with tools if necessary, but do not tighten them with anything other than your fingers.

To install the SDS-550, you must complete the following tasks. Each of these tasks will be discussed in detail later in this chapter.

1) **Mount the autosampler sample probe assembly.**

2) **Connect the autosampler rinse station.**

3) **Assemble the autosampler sample vial racks.**

4) **Connect the autosampler to the dilution module.**

5) **Establish external connections.**

6) **Connect the autosampler to the host computer.**

WARNING

Ensure that AC power is off before proceeding with installation.

Mounting the Z-Drive Assembly

Mounting the Z-drive assembly on the autosampler is the first major task in installation. The Z-drive assembly must be attached to the autosampler arm to allow movement and function of the sample probe. Figure 3–1 illustrates the Z-drive assembly components.

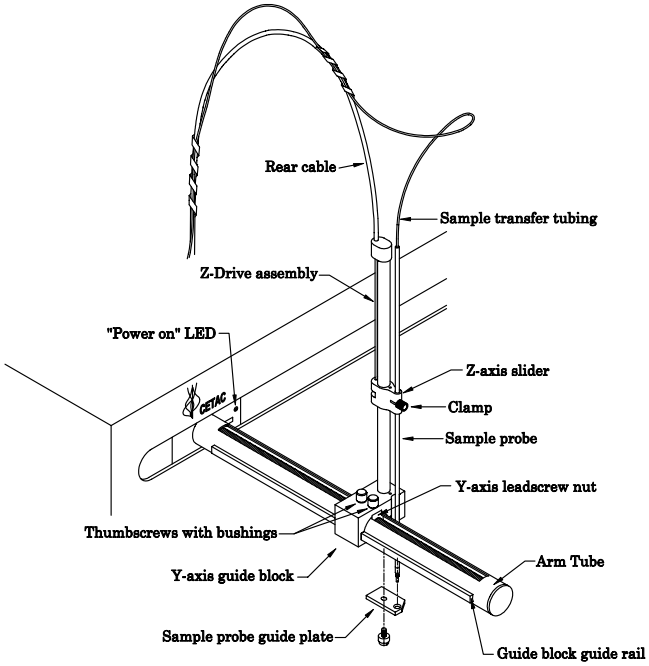

Figure 3–1. Z-Drive Assembly.

Attaching the Z-Drive Assembly to the Autosampler Arm

The autosampler arm governs the X and Y-axis travel of the sample probe assembly. To attach the Z-drive assembly to the autosampler arm, complete the following steps.

1) **Mount the Y-axis guide block and the Z-drive assembly from the free end of the autosampler arm with the Z-drive assembly pointing up and at the right-hand side as viewed from the front.**

2) **Mate the 6 x 3-millimeter grooves in the slider block to the guide rails on the Auto Sampler arm, and slide the block along the arm tube until the holes in the block align with the mating holes in the Y-axis lead screw nut. It may be necessary to slightly raise the bushings to cleat the leadscrew nut.**

3) **Secure the slider block until finger-tight 12-millimeter Nylon® thumbscrews installed from the top.**

Attaching the Z-Drive Mounting Block

Attaching the Z-drive mounting blocks to the autosampler is a simple process. To attach the mounting block, complete the following steps.

1) **Thread the 1.5-millimeter OD PEEK push-pull cable into the Z-axis rotor groove (Figure 3–2).**

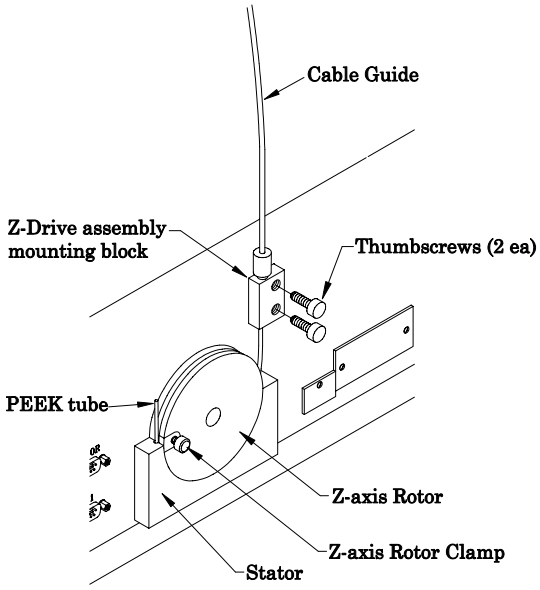

Figure 3–2. Back View of Autosampler Showing Z-Axis Rotor Groove and Mounting Block.

2) Attach the mounting block to the back of the autosampler cabinet with the stainless steel thumbscrews provided.

The blocks must be mounted with the holes to the right-hand side as viewed from the back or the rotor will not function properly. Do not tighten the rotor clamp at this time.

Installing the Sample Probe

To install the sample probe, complete the following steps:

1) **Install a clamp in the slot on the Z-axis slider. (Figure 3–1)**

2) **Install the sample probe through the Z-axis slider and then through the clamp. (Figure 3–1)**

3) **Move the Z-axis slider plus attached sample probe to the top of the Z-axis drive.**

4) **Leave approximately 10.5 centimeters of the sample probe's yellow-colored support tube extending above the top of the Z-axis slider, (with the slider at the top of the Z-axis drive).**

5) **Verify that the probe tip clears the top of the rinse station when the autosampler is in the home position (Figures 1-1, 3-1) above the rinse station.**

   You can manually move the autosampler arm with attached z-axis drive to the rinse station without damage to the autosampler.

6) **Retain the sample transfer tubing with the spiral-wrap at tie points approximately 15 and 40 centimeters above the top of the Z-axis drive, leaving an untangled service loop of approximately 13 to 15 centimeters above the probe.**

   The sample transfer tubing should still have slack remaining when the probe is at the maximum downward limit.

Setting the Z-Axis Travel

To set the Z-axis travel of the z-drive assembly, complete the following steps:

1) **Adjust the Z-axis slider (with attached sample probe) so that the slider is approximately 3-millimeters below the top of Z-axis drive. (Figure 3-1)**

2) **Rotate the Z-axis rotor (Figure 3–2) clockwise so the rotor stop pin is against the rotor stop.**

3) **Finger tighten the rotor clamp.**

   Ensure that the PEEK push-pull tube is fully located in the rotor clamp groove. Otherwise the PEEK tube will slip, resulting in no movement of the Z-axis slider.

4) **Manually rotate the Z-axis rotor back and forth several times and check for full, unhindered movement of the Z-axis slider.**

CAUTION

Do not maneuver the sample probe directly as damage may result.

5) **With the Z-axis in the full-up position, hold the Z-axis slider and adjust the sample probe tube up and down so that 3 to 6 millimeters extends below the sample probe guide plate.**

Figure 3–3. Z-Drive Assembly with Z-Axis Slider.

Connecting the Rinse Station

The cabinet-mounted rinse station is located at the extreme left position in the standards rack. Typically, deionized water or a dilute acid solution is used as the rinse solution and is pumped into the rinse station by the on-board peristaltic pump.

Since the peristaltic pump inlet is at the top of the pump and the outlet is at the bottom, the rinse solution flows from the bottom to the top of the rinse station. Up-flow rinsing is the most effective method for decontaminating the sample probe tube between samples. Reversing the connections and the rinse solution flow reduces the effectiveness of the rinse station and can cause cross-contamination and unsatisfactory performance.

The waste rinse solution drains from the top of the rinse station by means of a pumped drain, which is the standard arrangement for draining the rinse station. If it is not desirable to use a pumped drain, you can create a gravity drain arrangement. This section contains instructions for both the pumped drain arrangement and the gravity drain arrangement.

Pumped Drain Arrangement

In a pumped drain arrangement, the rinse solution moves through the on-board peristaltic pump to the inlet at the bottom of the rinse station, as shown in Figure 3–4. It then drains out the top of the rinse station and into the rinse solution waste container through the second channel of the on-board peristaltic pump.

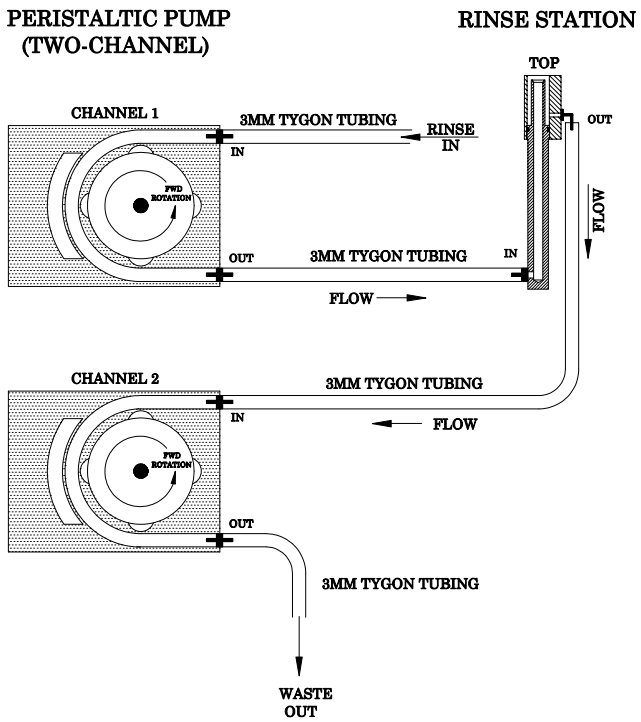

Figure 3–4. Pumped Drain Arrangement.

To connect the rinse station using the pumped drain, complete the following steps:

1) **Connect the rinse solution source to the on-board peristaltic pump by inserting the 3 millimeter i.d. tubing onto the inlet at the top of the pump. Use Channel 1, the outermost channel.**

Channel 1 is equipped with 1.42mm i.d. Pharmed®[1] peristaltic pump tubing. Use the 3 mm i.d. Tygon®[2] tubing for the rinse solution uptake.

2) Connect the peristaltic pump to the rinse station by completing the following steps.

Use 30 centimeters of the tubing provided for the rinse solution uptake.

a) Insert one end of the 3 millimeter i.d. tubing onto the outlet at the bottom of the pump.

Insert the tubing carefully because the peristaltic pump fitting grips the tubing tightly. If you apply too much force, the fitting can break off.

b) Insert the other end of the 3 millimeter i.d. tubing onto the rinse tube inlet at the bottom of the rinse station.

Again, insert the tubing carefully to avoid breaking the fitting.

3) Connect the rinse station to the second channel of the on-board peristaltic pump by completing the following steps.

Use 30 centimeters of the 3-millimeter i.d. tubing provided.

a) Insert the 3 millimeter i.d. tubing onto the top outlet of the rinse station.

Insert the tubing carefully because the rinse station fitting grips the tubing tightly. If you apply too much force, the fitting can break off.

b) Place the other end of the tubing onto the pump inlet (top of Channel 2).

Again, insert the tubing carefully to avoid breaking the fitting. Channel 2 is equipped with 2.0mm i.d. Pharmed® peristaltic pump tubing. The larger i.d. tubing is used to pump the waste from the rinse station at a higher rate than the rinse station inlet. This will prevent any overflow from the rinse station.

[1] Pharmed is a registered trademark of Norton Co.
[2] Tygon is a registered trademark of Norton Co.

4) Connect the second channel of the on-board peristaltic pump to the rinse solution waste container by completing the following steps.

Use up to 1.8 meters of the tubing provided for the pumped drain.

a) Insert the 3-millimeter i.d. tubing onto the peristaltic pump outlet.

Insert the tubing carefully because the rinse station fitting grips the tubing tightly. If you apply too much force, the fitting can break off.

b) Place the other end of the tubing into the waste container.

Ensure that the tubing outlet is placed in the waste container so that it will not be immersed in the waste solution. Immersion of the drain tube outlet may cause the waste solution to back up and overflow.

Gravity Drain Arrangement

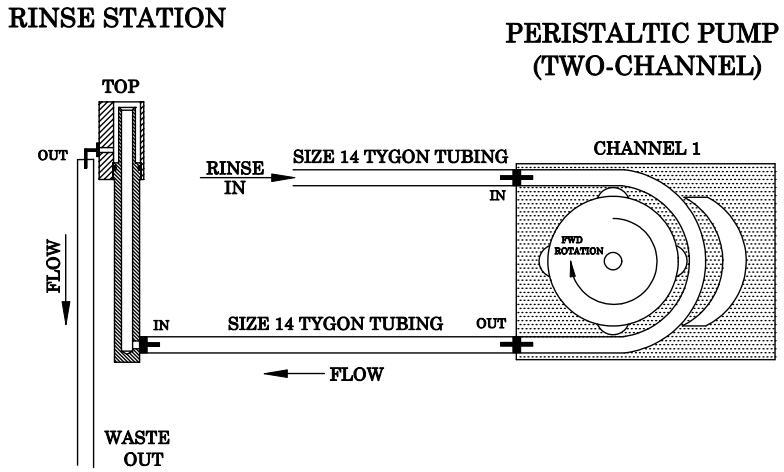

Figure 3–5. Gravity Drain Arrangement.

In a gravity drain arrangement, the rinse solution moves through the peristaltic pump to the inlet at the bottom of the rinse station, as shown in Figure 3-5. It then drains out the top of the rinse station by means of a gravity drain.

To connect the rinse station using a gravity drain, complete the following steps:

1) **Connect the rinse solution source to the on-board peristaltic pump by inserting the 3-millimeter i.d. tubing onto the inlet at the top of the pump.**

   Use the tubing provided for the rinse solution uptake.

2) **Connect the peristaltic pump to the rinse station by completing the following steps.**

   Use 30 centimeters of the tubing provided for the rinse solution uptake.

   a) **Insert one end of the 3-millimeter i.d. tubing onto the outlet at the bottom of the pump.**

      Insert the tubing carefully because the peristaltic pump fitting grips the tubing tightly. If you apply too much force, the fitting can break off.

   b) **Insert the other end of the 3-millimeter i.d. tubing onto the rinse tube inlet at the bottom of the rinse station.**

      Again, insert the tubing carefully to avoid breaking the fitting.

3) **Connect the rinse station to the waste container by completing the following steps.**

   Use up to 1.8 meters of the tubing provided for the gravity drain. Ensure that the waste container is at least 30 to 60 centimeters lower than the rinse station outlet.

   a) **Insert the 5-millimeter i.d. tubing onto the rinse station outlet (on top).**

      Insert the tubing carefully because the rinse station fitting grips the tubing tightly. If you apply too much force, the fittings can break off.

b) Place the other end of the tubing into the rinse solution waste container.

Ensure the tubing outlet is placed in the waste container so that it will not be immersed in the waste solution. Immersion of the drain tube outlet may cause the waste solution to back up and overflow.

Assembling and Placing the Sample Vial Racks

Sample vial racks for the Auto Sampler are shipped flat. However, you can easily assemble them without using tools. Once you assemble the sample vial racks, place them in the sample tray before proceeding with the installation.

WARNING

Before loading or unloading any sample vial racks on the sample tray, park the sampling arm and probe in the home position by cycling the power off and on. The home position is the initial position at power-up. Never attempt to load, unload, or reposition a sample vial rack or sample vial while the autosampler is operating.

To assemble and place the sample vial racks, complete the following steps:

1) Snap the racks together as shown in the instructions included with each rack.

You can also easily disassemble the racks if you need to ship or store them.

Note:

Keep at least one copy of the assembly instructions provided for each rack. Keep the copy with this manual for reference.

2) Place the first sample vial rack at the extreme left-hand side of the sample tray so that the feet on the rack's underside engage the locating ribs on the sample tray's surface.

Correctly placed sample vial racks will not move more than ±2 millimeters in either a left/right or forward/backward direction unless you lift them. Tilted sample vials indicate an improperly placed rack, which must be corrected before you operate the SDS-550 System.

3) **Place the next sample vial rack to the right of the previous rack so that the feet on the rack's underside engage the locating ribs on the sample tray's surface.**

   Ensure that the rack is not tilted and is properly placed.

4) **Repeat step 3 until you place all the sample vial racks.**

   When viewed from the front of the SDS-550, the sample vial racks should now be arranged on the sample tray as follows: rack #1 at the extreme left position, rack #2 at the left center position, rack #3 at the right center position, and rack #4 at the extreme right position.

Tray Adapter for Gilson Sample Vial Racks

An optional tray adapter for the autosampler is available for the accommodation of Gilson sample vial racks. Racks that can be used are the 14, 44 and 60 position types. The tray adapter can hold up to five racks, with the SDS-550 System software allowing access to four racks (starting from the left to right side of the autosampler).

The tray adapter simply seats into the standard autosampler tray; it has raised tabs onto which the sample vial racks are securely placed. For more information about the tray adapter, please contact CETAC Customer Service.

Connecting the Autosampler to the Dilution Module

There is one liquid connection between the autosampler and the dilution module. One end of the autosampler probe is equipped with a ¼ • 28 Tefzel®[3] fitting (nut plus ferrule). This fitting is attached (finger tighten only) to the top threaded port of the solenoid valve on the front of the dilution module. (Figure 3-6)

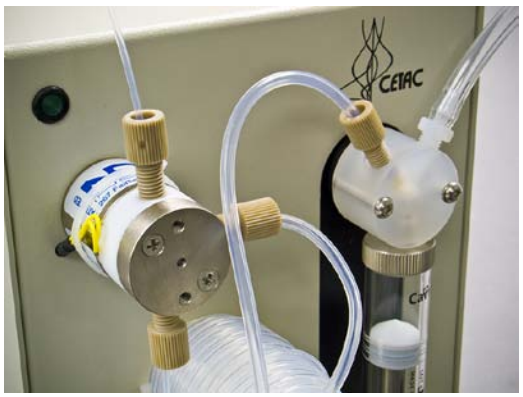

Figure 3-6. Autosampler Probe Connection to Solenoid Valve.

Establishing External Connections

The next step in the installation process involves connecting the SDS-550 System (autosampler and dilution module) to the power source and to a host computer. The following sections explain how to establish these connections.

[3]Tefzel is a registered trademark of E.I. du Pont de Nemours and Company.

Connecting the Autosampler to the Power Source

A voltage-specific external desk-top power supply is supplied with the autosampler.

WARNING

Use only this external desk-top power supply or an exact replacement.

To connect the autosampler to a power source, plug the external desk-top power supply cord into the power connector located on the back panel. Then plug the power supply's cord into a 100–240-VAC ±10%, 50/60-Hz utility power outlet.

Connecting the Dilution Module to the Power Source

A voltage-specific external desk-top power supply is supplied with the dilution module.

WARNING

Use only this external desk-top power supply or an exact replacement.

To connect the dilution module to a power source, plug the external desktop power supply cord into the power connector located on the module's back panel. Then plug the power supply's cord into a 100-240VAC ± 10%, 50/60Hz utility power outlet.

Connecting the Autosampler to the Host Computer and Dilution Module

You cannot operate the SDS-550 System until you establish a communications interface between the autosampler/dilution module and the host computer. It is through this interface that the host computer directs the operation of the SDS-550. The SDS-550 supports the following communications protocol:

- The serial (RS-232C) protocol is the standard configuration. The USB protocol is an optional configuration. Two RS-232C serial ports are on the autosampler and one RS-232C serial port is on the dilution module.

- One 37-pin auxiliary port is on the back of the autosampler and one DB9F input/output port is on the back of the dilution module.

CAUTION

When interconnecting any computing devices, keep the communications cables away from sources of electromagnetic or Radio Frequency (RF) interference, such as electric motors, transformers, fluorescent light ballasts, or RF energy sources. Limit cable runs for RS-232C to less than 16 meters. If these conditions cannot be satisfied, use low-impedance, fully shielded cables to provide satisfactory operation. The cables are available from many sources, but you will need to specify the correct mating connectors and "straight-through" (DTE-DCE) wiring.

Establishing a Serial Communications Interface

The serial interface kit provided with the autosampler includes two interface cables, each equipped with two modular DB9F port adapters. Use the interface kit to first establish a serial communications interface with the host computer. To do so, complete the following steps:

Note:

If the host computer does not have an RS-232 port, USB must be used. Begin at step 5.

1) **Plug one end of one cable into the host computer's serial (COM) port selected for autosampler communications.**

   Make sure that the COM port you select matches the port selected in the host computer's software. If using the optional USB cable for autosampler host computer communication, skip to step 5 below then proceed with the instructions for USB communication.

2) **Finger tighten both screws.**

3) **Connect the other end of the cable to the autosampler COM1 port.**

CAUTION

Ensure that you are connecting the adapter to the COM1 port. Connecting the adapter to the dilutor port on the autosampler will cause a malfunction. The autosampler dilutor port is used for communications to the dilution module or other devices other than the host computer.

4) **Finger tighten both screws.**

5) **Plug one end of the other cable (with DB9F adapters) into the autosampler's COM2 port.**

6) **Connect the other end of this cable to the dilutor module syringe port (top port).**

7) **Finger tighten both screws.**

Establishing a USB Communications Interface

The serial interface kit provided with the SDS-550 does not include a USB cable. This cable may be obtained from any computer store. Complete the following steps for the USB interface:

1) **Power up both the computer and the autosampler.**

2) **Run the FTDI program on the CETAC Installation CD. A pop-up screen will read, "FTDI CDM Drivers have been successfully installed." Click OK.**

3) **Plug one end of the cable into the host computer's USB port and the other end of the autosampler's port.**

4) **Confirm the COM port selected for the USB matches the port selected in the host computer's software.**

Click the start button, select:

Control Panel>>>Systems>>>Hardware>>>DeviceManagers>>>+Port (Com & LPT).

Establishing Control of the Dilution Module Solenoid Valve

A communication link needs to be made to the three-way solenoid valve. The valve allows the introduction of one reagent to the diluted sample. A solenoid control cable is provided with one DB37F and one DB9M port adapter.

1) **Connect the DB37F end of the cable into the 37-pin auxiliary port on the back of the autosampler.**

2) **Finger tighten both screws.**

3) **Connect the DB9M end of the cable (with 9 pins) into the solenoid port (bottom) on the back of the dilution module.**

4) **Use a small flat-blade screwdriver to tighten this adapter.**

Figure 3-7 shows a view of communication and power connections for the SDS-550 System.

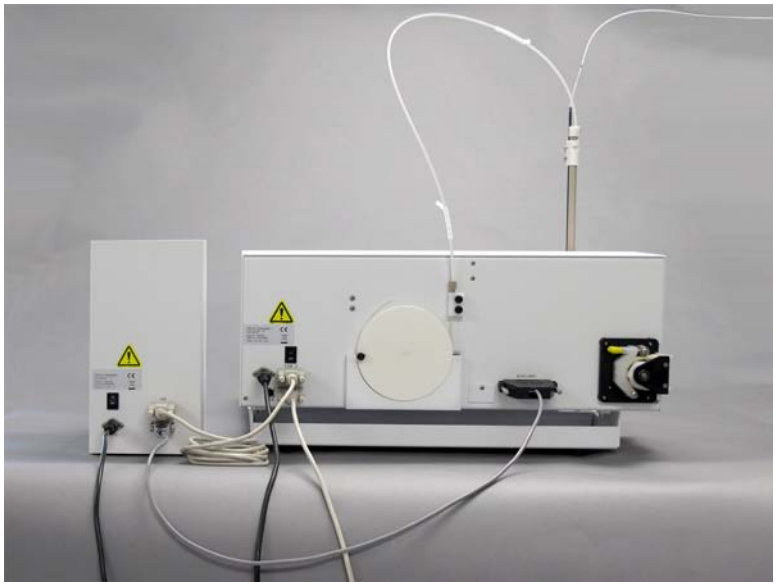

Figure 3-7. View of rear connections.

Solution Connections to the Dilution Module

Two additional solution connections are then made to the dilution module. One connection is made to the bottom port of the solenoid valve (Figure 3-8). Attach a two foot length of 1/8" i.d. Tygon® tubing. Place the open end of Tygon® line into a diluent container.

Figure 3-8. Reagent Line Connection to Solenoid Valve.

The second connection is made to the right side port of the syringe assembly. Finger tighten the 1/4" ∗ 28 Tefzel® fitting (for 1/8 inch tubing) into the side port (Figure 3-9). Place the open end of the PTFE line into a diluent container.

Figure 3-9. Diluent Line Connection to Side of Syringe Assembly.

Note:

Use a suitable volume container for the desired number of dilutions and desired dilution ratios. For example, a total of 60 1:10 dilutions each to a final volume of 10mL requires a minimum of 600mL diluent. A 1-liter container holding approximately 700mL of diluent would be satisfactory.

4

Verifying Installation

Verifying Installation

Once installation of the SDS-550 System is complete, it is important to verify that you have installed it correctly. Attempting to use it before ensuring that it is installed correctly may result in damage to the SDS-550.

Verifying installation of the SDS-550 consists of two parts:

- Ensuring that the communications interface between it and the host computer is working.
- Ensuring that the sample probe, solenoid valve, and syringe assembly function properly.

This chapter explains how to test the above items before using the SDS-550.

Note:

The procedures given in this chapter are for use in a Windows 95 or Windows NT, Windows 2000 or Windows XP environment.

Testing the Interface

If the communications interface and proper COM device selection between the SDS-550 and the host computer is not established correctly, the autosampler and dilution module will not function. Before you test the interface, ensure that the communication port connectors are properly attached between the host computer, autosampler, and dilution module.

> **Note:**
>
> The following procedures assume that you have opened Windows 95 or Windows NT and the Program Manager window is showing.

To test the communications interface, complete the following steps:

1 **Start the host computer and go to the main Windows screen.**

2 **Power up the Auto Sampler and the Dilution Module.**

3 **Click the start button in the lower left corner of the Program Manager window.**

A selection list will appear.

4 **Select Programs>>>Accessories>>>Hyperterminal and double-click.**

The Hyperterminal®[1] window appears (Figure 4–1).

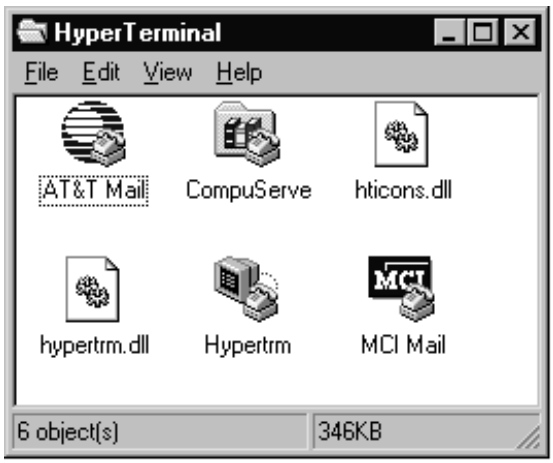

Figure 4–1. Example of Hyperterminal® Window.

[1] Hyperterminal is a registered trademark of Hilgraeve, Inc.

5 Double click on the Hyperterminal® icon.

The Connection Description box appears (Figure 4–2).

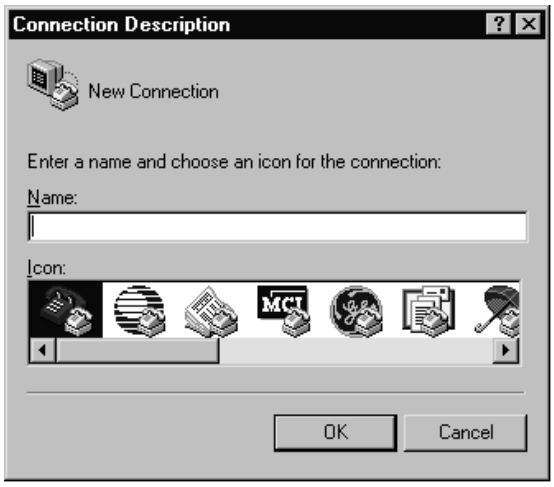

Figure 4–2. Connection Description Box.

6 Type the name COM1_test for the connection and choose an icon from the list given, and click OK.

The phone number box appears (Figure 4-3).

Figure 4-3. Phone Number Box.

7 **Select Direct to COM1 in the Connect Using box. Click OK.**

The COM1 Properties box appears (Figure 4-4).

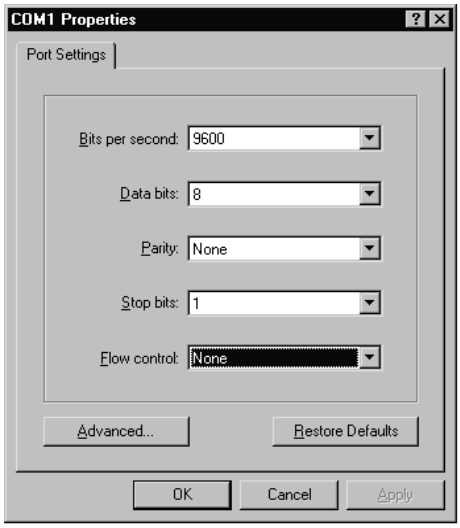

Figure 4-4. COM1 Properties Box.

8 **Change the bits per second to 9600, set the data bits to 8, the parity to none, the stop bits to 1, the flow control to none, and click OK.**

9 **Select File>>>Properties.**

The COM1_Test Properties box appears.

10 **Select Settings on the COM_Test Properties box and click on the ASCII setup button on the lower right of the box.**

The ASCII setup box appears (Figure 4-5).

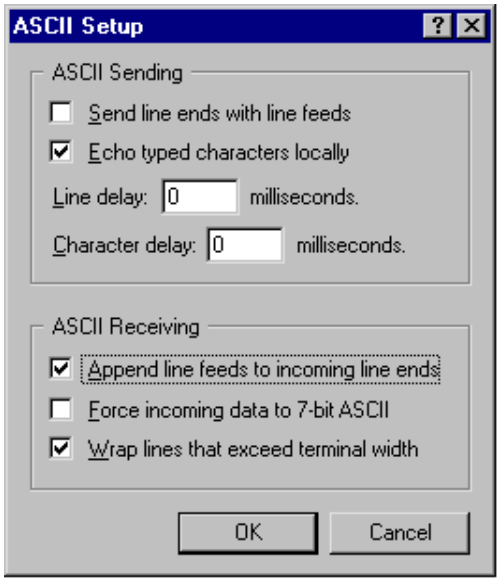

Figure 4-5. ASCII Setup Box.

11 **In the ASCII Setup box, select the following items:**

a. Echo typed characters locally.

b. Append line feeds to incoming line ends.

c. Wrap lines that exceed terminal width.

Click OK.

12 Click OK on the COM1_Test Properties box.

13 Type HOME at the cursor in the upper left of the main Hyperterminal® screen, and press Enter.

The autosampler resets, with the sample probe moving out and back into the home position. If the autosampler does not reset, see Chapter 7, "Troubleshooting the SDS-550 System."

Checking the Autosampler Components

The following autosampler components may be damaged during shipping or installation: The sample probe, the peristaltic pump tubing, and the rinse station and tubing. It is important that you check these components for damage before you operate the SDS-550. To do so, complete the following steps:

1) Shut down and unplug the power to the autosampler.

2) Visually inspect the sample probe, peristaltic pump tubing, and rinse station and tubing for leaks or signs of damage.

If you detect a leak or other damage to an autosampler component, you must replace it. For more information, see the appropriate section in Chapter 6, "Maintaining the SDS-550 System."

Testing the Sample Probe

The sample probe must descend into the center of each sample vial to ensure satisfactory sample uptake. Shipping or rough handling can disturb the autosampler's cabinet-to-base alignment. If it is incorrectly aligned, the sample probe will not function properly. It is therefore important to test the sample probe before you actually run samples with the autosampler.

> **Note:**
>
> Before testing the sample probe, ensure that you have installed all autosampler components correctly. Also, ensure that you have securely tightened all thumbscrews and connected the communications cable from the host computer to the COM1 port on the autosampler.

Testing the sample probe involves observing the operation of the sample probe. To do so, complete the following steps:

1) **Load the autosampler sample tray with empty sample vial racks.**

   For information about placing the sample vial racks, see Chapter 3, "Installing the SDS-550."

2) **Plug the autosampler into the power source. Turn the autosampler power switch on and verify that the LED power indicator is on.**

   The LED power indicator is green in color. The indicator is located behind the sample probe assembly when it is in the home position.

3) **Using the SDS Sample Dilution System Software, designate sample positions at the left rear, left front, right rear, and right front of the sample tray.**

   Consult the *SDS-550 Sample Dilution System Software Manual* for easy instructions for manual movement of the sample probe.

> **Note:**
>
> If the autosampler alignment is not correct, contact CETAC Technologies Customer Service and Support or an authorized representative.

Checking the Dilution Module Components

The following dilution module components may be damaged during shipping or installation: The solenoid valve, the sample loop, and the syringe assembly. You should check these components for damage before you operate the SDS-550. To do so, complete the following steps:

1) **Shut down and unplug the power to the dilution module.**

2) **Visually inspect the solenoid valve, the sample loop, and the syringe assembly for any signs of damage.**

If you detect any damage to a dilution module component, you must replace it. For more information, see the appropriate section in Chapter 6, "Maintaining the SDS-550 System."

Testing the Solenoid Valve

The solenoid valve allows the addition of one reagent to a diluted sample. To test the valve, go to the SDS-550 System Software. (See the *SDS-550 Sample Dilution System Software Manual* for details.)

1) **Turn on and boot up the host computer.**

2) **Connect the autosampler and dilution module to their power sources and turn on both units.**

3) **Enter the SDS-550 Software and go to the Manual Control screen.**

4) **On the upper right of the screen are controls for the syringe. Choose "sample" or "reagent" and listen for a switching sound as the solenoid valve is activated.**

If no switching sound is heard, check all connections to the silution module and the autosampler. If the valve still does not activate, power down the dilution

module and autosampler and reboot the host computer. Then power up the autosampler and dilution module and try again.

Note:

If there is still not switching sound, contact CETAC Service or other Authorized CETAC Representative.

Note:

Ensure the autosampler and dilution module are powered on before you enter the SDS-550 Software.

Testing the Syringe Assembly

The syringe assembly will uptake sample, a reagent, and diluent and dispense the resulting solution into a designated collection vial. The syringe assembly can be tested in the same Manual Control page as for the solenoid valve.

1) **Place the open end of the diluent uptake line in a container with at least 50mL of deionized water.**

CAUTION

Do not attempt to activate the syringe without solution in the uptake line. The syringe plunger could seize if operated dry.

2) **Place a 21-position vial rack in the first (left-most) position in the autosampler tray. Insert a 50mL vial in the first vial position (far upper left corner).**

3) **On the Manual Control screen, go to the upper left under autosampler. Choose Rack #1, Size 21, and type Position 1. Then click on the Go To key.**

The autosampler probe assembly should position itself over the 50mL vial. The probe can then be descended by clicking the Down Key under the Probe section of the Manual Control screen. A probe depth of 120 steps is sufficient. (See Figure 4-6).

Figure 4-6. Manual Positioning for Syringe Flush.

4) In the syringe section of the Manual Control screen, click Flush.

The syringe will load and dispense a full 10-mL aliquot of the water *twice* into the designated 50-mL vial (a total of 20mL of water). The Flush button does not move the autosampler probe.

5) Click Home at the lower left of the Manual Control screen.

The probe assembly should return to the rinse station.

Note:

The syringe may also be tested via the solenoid valve. With the valve switched to the reagent setting, the open end of the reagent uptake line would be placed in a container with deionized water. A volume up to 10-mL can be chosen, and then the Load Key is selected. Water will be drawn through the valve and into the syringe. The water can then be dispensed into a designated vial by clicking the Dispense Key.

Alternate Syringe Assembly Test

The syringe assembly may also be tested using the Flush button in the SDS-550 System Software. A Flush button is located at the bottom right of the main SDS-550 System Software screen and in the syringe section of the Manual Control screen. The SDS-550 flushes at the rinse station.

1) **Place the open end of the Diluent Uptake Line in a container with at least 50mL of deionized water.**

2) **In the Manual Control Screen, click Home.**

   The probe will move to the rinse station.

3) **Click on one of the Flush buttons to test the syringe.**

   The syringe will load and dispense a full 10-mL aliquot of the water *twice* into the rinse station (a total of 20mL of water).

5

Using the SDS-550 System

Using the SDS-550 Sample Dilution System

The SDS-550 is both reliable and easy to use. Before using it, however, ensure that your lab environment provides operating conditions that will prolong the life of the SDS-550. Once the proper operating conditions are met, you can arrange the sample vial racks and start the Auto Sampler sequence run. When you finish using it, you may need to flush the Auto Sampler rinse station, the sample flow path, and the syringe assembly.

This chapter explains how to create the proper operating conditions for using the SDS-550 System. It also explains how to arrange the sample vial racks, start and shut down the Auto Sampler, and flush the rinse station, sample flow path, and syringe assembly.

Establishing Optimal Operating Conditions

The SDS-550 operates reliably even under less than ideal conditions. It is not, however, indestructible. Malfunction or damage can occur if specific operating conditions are not met. Meeting these conditions requires that you create the proper lab environment, replace SDS-550 components that wear out under normal use, and purchase the appropriate supplies for use with the SDS-550 System. The following sections explain how to meet these conditions.

Note:

Damage or malfunction that results from unsatisfactory operating conditions may constitute misuse and abuse, and subsequent exclusion from warranty coverage.

Creating the Lab Environment

To create satisfactory operating conditions in your lab environment, follow these guidelines:

- Operate the SDS-550 in a conventional lab environment where the temperature is 50–95°F (10–35°C); the humidity is 20–70% non-condensing; and the unit is not exposed to excessive flammable or corrosive materials.

- Avoid rough handling of the SDS-550 System. If possible, do not expose the Auto Sampler or Dilution Module to vibration or shock.

- Protect the SDS-550 from long-term exposure to condensation, corrosive materials, solvent vapor, continual standing liquids, or large spills into the Auto Sampler or Dilution Module cabinets or the Auto Sampler arm. Exposures of this type can damage the drive mechanisms as well as the electronics.

- Observe the same general electrostatic discharge precautions as with any other integrated circuit electronic device. Low humidity environments, especially when combined with static-generating materials, require maximum care.

WARNING

Discharge static buildup and ground to the Auto Sampler / Dilution Module base or cabinet before performing any maintenance. Do not touch or short-circuit bare contacts, COM1, DILUTOR, SYRINGE, SOLENOID, or auxiliary ports.

- Avoid using the SDS-550 if strong electromagnetic interference, radio frequency interference, or radioactivity is present. Interference fields can cause erratic operation of the Auto Sampler and the Dilution Module. The SDS-550 will not function properly if the level of radioactivity is above background.

Replacing Auto Sampler Components

The following Auto Sampler components wear out under normal use and must be replaced periodically.

- peristaltic pump tubing (for the rear on-board peristaltic pump)
- sample probe

If you fail to replace these components when they deteriorate, the Auto Sampler will not function properly. For information about replacing Auto Sampler components, see Chapter 6, "Maintaining the SDS-550 System".

Purchasing Supplies

You should maintain an adequate supply of spare sample vials. When you need to purchase additional supplies, it is extremely important that you choose the appropriate sizes and materials.

When you purchase sample vials, make sure they meet the following requirements:

- The diameter of the sample vial matches the rack size you are using.
- The height does not exceed 125 millimeters.
- The sample vial material is compatible with the samples you are diluting. Sample vials available from CETAC are made of polypropylene.
- The peristaltic pump tubing is compatible with the rinse solution for the Auto Sampler rinse station. Peristaltic pump tubing available from CETAC includes Tygon® and Pharmed® tubing. (Pharmed® is supplied as the standard peristaltic pump tubing material.)

WARNING

Use of mismatched sample vials and sample vial racks may result in malfunctions or sample spills. Be sure your vials meet the given requirements.

To order additional supplies, refer to the *CETAC Accessories and Supplies Catalog* for the ASX-500 Model 510 Auto Sampler.

Arranging the Sample Vial Racks

You can change the arrangement of the sample vial racks to meet your needs. The Auto Sampler accommodates up to four sample vial racks of 21, 24, 40, 60, or 90 positions each.

For more information about placing sample vial racks in the sample tray, see Chapter 3, "Installing the SDS-550 System".

CAUTION

Incorrectly defining the position count can result in sample spills and invalid dilution results.

Note:

An optional Auto Sampler tray adapter is available for Gilson 14, 44, and 60 position sample vial racks. See Chapter 3 "Installing the SDS-550 System" for more details.

Replacing the Dilution Module Components

The following Dilution Module components may wear out under normal use and need replacement:

- Syringe body and plunger

- Syringe valve
- Solenoid valve

The syringe body (glass cylinder) and plunger and the syringe valve comprise the syringe assembly. Malfunction of the above listed components is usually indicated by a liquid leak. The valves may also fail to switch or the syringe may seize. For information about replacing Dilution Module components, see Chapter 6, "Maintaining the SDS-550 System".

Starting the SDS-550 System

Once you arrange the sample vial racks and ensure that the arrangement is correctly defined in the software, you can start the SDS-550 and let it run until the dilution sequence is complete. To do so, perform the following steps:

1 **Ensure that the Auto Sampler rinse station is properly connected.**

For more information about proper connections, see Chapter 3, "Installing the SDS-550 System."

2 **Turn the Auto Sampler and Dilution Module power switches on.**

The green LED indicators will light up when the power is on.

3 **Access the SDS-550 System software and go to the Manual Control page. Click the pump on button in the bottom right of the page. (See the *SDS-550 Sample Dilution System Software Manual*.)**

4 **Adjust the peristaltic pump shoe until the desired flow rate is achieved for the rinse solution.**

5 **Purge air from the rinse system by placing the rinse uptake tubing in the rinse solution source and running the solution through the rinse station.**

Ensure there are no air bubbles visible in the rinse uptake tubing before you dilute samples with the SDS-550 System.

6 **Flush the syringe with the intended diluent solution. This is also done in the Manual Control page. See pages 4-10 to 4-13 in Chapter 4, "Verifying Installation of the SDS-550 System".**

> **Note:**
>
> If you are flushing the rinse station during initial startup, first use a 2% nitric acid solution as the rinse agent. Flush the rinse station a second time using deionized water.

7 **Access the host computer's software and activate a dilution method.**

The SDS-550 runs until it reaches the end of the dilution sequence. (See the *SDS-550 Sample Dilution System Software Manual* for details).

Shutting Down the SDS-550 System

To shut down the SDS-550, complete the following steps:

1 **Drain the Auto Sampler rinse system by removing the rinse solution uptake tubing from the rinse solution source. Let the peristaltic pump run until all solution drains from the tube attached to the rinse station outlet.**

If you use a rinse solution other than deionized water, flush the rinse system with deionized water before shutting down the SDS-550 System. For more information, see the following section, "Flushing the Rinse Station and Flow Path."

2 **Release the pressure shoe on the peristaltic pump.**

Releasing the pressure shoe decreases wear on the pump tubing.

3 **Flush the syringe assembly with deionized water if a diluent solution other than deionized water was used. See pages 4-10 to 4-13 in Chapter 4, "Verifying Installation of the SDS-550 System", for details.**

Flushing the syringe assembly with deionized water after using corrosive diluent solutions prevents degradation and failure of syringe assembly components. Also, any dissolved solids are removed, which could cause seizure of the syringe.

4 **Turn off power to the Auto Sampler and Dilution Module.**

Flushing the Auto Sampler Rinse Station and Flow Path

Generally, you can operate the Auto Sampler without flushing the rinse station. Under normal circumstances, you can simply drain the rinse station prior to shutting down the Auto Sampler. However, you need to flush the rinse station and flow path under two circumstances:

- During initial startup of the Auto Sampler after installation
- Following the use of strong acids, bases, or organic solvents as rinse agents

Flushing the rinse station during initial startup of the Auto Sampler removes any contaminants that could cause interference during sample dilution. Flushing the rinse station after using strong rinse agents prevents degradation and failure of the flow path components.

To flush the rinse station and flow path, complete the following steps:

1 **Insert the rinse solution uptake tubing into a deionized water source.**

> **Note:**
>
> If you are flushing the rinse system during initial startup, first use a 2% nitric acid solution as the rinse agent, followed by deionized water.

2 **Run the rinse solution through the rinse station and flow path for 5 to 10 minutes.**

Once you flush the rinse station, you can proceed with the dilution sequence or drain the rinse station as part of the shutdown procedure. For information about running a dilution sequence, see the *SDS-550 Sample Dilution System Software Manual*. For more information about draining the rinse station, see the previous section, "Shutting Down the SDS-550 System."

6

Maintaining the SDS-550 System

Maintaining the SDS-550 System

Routine maintenance of the SDS-550 consists of daily and weekly cleaning of specific Auto Sampler and Dilution Module components. Routine maintenance also includes checking these components for leaks or other damage. Additional periodic maintenance tasks may be required, including replacement of the following Auto Sampler components: peristaltic pump tubing, sample probe, rinse station tubing, and sample tray.

This chapter explains how to clean the SDS-550, inspect it for leaks, and replace damaged components.

WARNING

Discharge static buildup and ground to the Auto Sampler and/or Dilution Module base or cabinet before performing any maintenance. Do not touch or short-circuit bare contacts, COM1, DILUTOR, SYRINGE, SOLENOID, or auxiliary communication ports.

Cleaning the Auto Sampler

Cleaning the Auto Sampler is an important maintenance task. Failure to do so regularly may cause increased wear and reduce the Auto Sampler's life.

You should clean the Auto Sampler both daily and weekly to prevent damage and extend its life. It is especially important to clean up spills and remove contaminants, such as abrasives, from the Auto Sampler's moving parts. It may also be necessary to chemically neutralize spills. The following sections explain daily and weekly cleaning procedures.

Daily External Cleaning

Use of the Auto Sampler often results in spills on Auto Sampler components such as the sample tray. Good maintenance requires that you clean the Auto Sampler daily. To do so, complete the following steps:

1 **Shut down and unplug the Auto Sampler.**

For information about shutting down the Auto Sampler, see Chapter 5, "Using the SDS-550 System."

2 **Wipe the sample tray, Auto Sampler cabinet, and Auto Sampler arm using a towel dampened with a lab-grade cleaning agent.**

CAUTION Do not allow the cleaning agent to come into contact with the lead screws. Also, never lubricate either of the two lead screws.

3 **Repeat step 2, using a towel dampened with clear water.**

This process removes any remaining contaminants.

4 **Dry the sample tray, Auto Sampler cabinet, and Auto Sampler arm using a dry towel.**

The Auto Sampler must be thoroughly dry before you turn the Auto Sampler power on.

Weekly Cleaning

Although daily cleaning removes spills and contaminants from most of the Auto Sampler components, it is necessary to clean the Auto Sampler more thoroughly once a week. To do so, complete the following steps:

1 Shut down and unplug the Auto Sampler.

2 Remove the sample tray.

For information about removing the sample tray, see "Replacing the Sample Tray" later in this chapter.

3 Wipe loose particles off the Y-axis lead screw with a dry, lint-free cloth.

The Y-axis lead screw is a large metal screw located inside the Auto Sampler arm tubing, as shown in Figure 6–1.

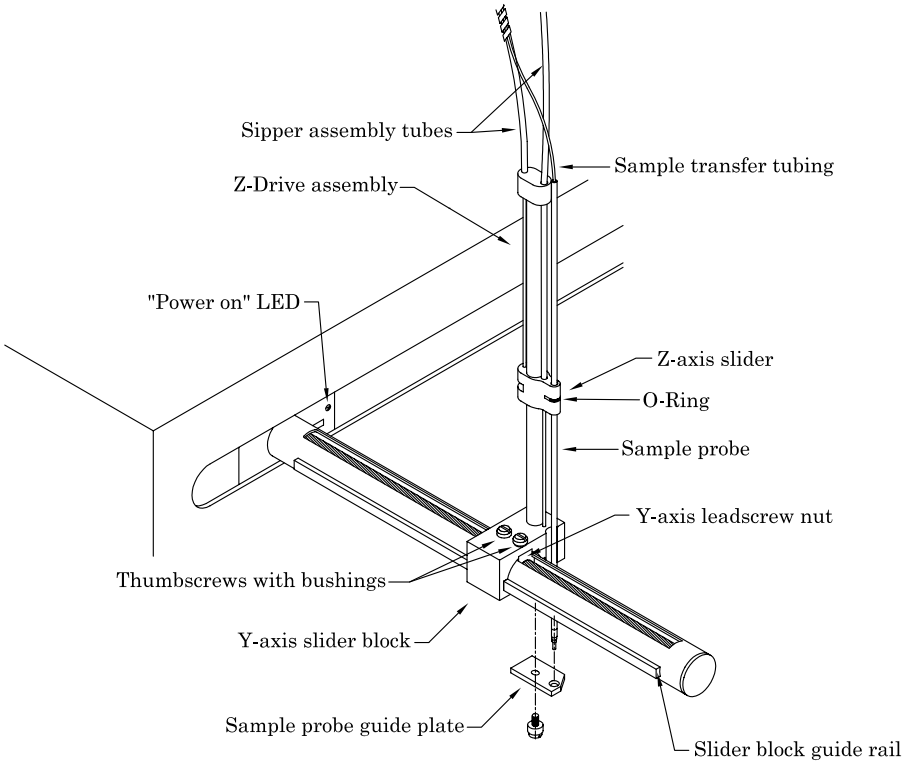

Figure 6–1. Z-Drive Assembly on Auto Sampler Arm.

WARNING

Never lubricate the lead screws. The lead screw nuts are compounded with a dry film lubricant. Oiling the lead screws will cause gumming, galling, and binding of the sample probe assembly.

4 **Wipe the Auto Sampler exterior and base until they are clean, using a towel dampened with a lab-grade cleaning agent, followed by a towel dampened with clear water.**

Pay special attention to the slider block and guide rails on the tube of the Auto Sampler arm.

5 **Wash the sample tray in a warm detergent solution.**

Make sure you remove all spills and stains.

6 **Rinse the sample tray with clear water and then dry it.**

Ensure that the sample tray is thoroughly dry.

7 **Replace the sample tray on the Auto Sampler base.**

For information about replacing the tray, see "Replacing the Sample Tray" later in this chapter.

Checking for Leaks

Several of the Auto Sampler components have a limited life and will wear out under normal use: the sample probe, the peristaltic pump tubing, and the rinse station and tubing. Standard maintenance procedures require that you periodically check these components for leaks. To do so, complete the following steps:

1 **Shut down and unplug the Auto Sampler.**

2 **Visually inspect the sample probe tube, peristaltic pump tubing, and rinse station and tubing for leaks or signs of deterioration.**

If you detect a leak or other damage to an Auto Sampler component, you must replace it. For more information, see the appropriate section in this chapter.

Replacing Peristaltic Pump Tubing

Routine maintenance of the Auto Sampler includes replacement of the peristaltic pump tubing. Because of the operating nature of peristaltic pumps, the tubing will probably be the most frequently replaced item on the Auto Sampler. If you use strong acids, bases, or solvents as rinsing agents, the tubing may deteriorate rapidly.

To replace the peristaltic pump tubing, complete the following steps:

1 **Shut down and unplug the Auto Sampler.**

2 **Release the pressure shoe and remove the old tubing.**

Carefully pull or cut the old tubing to remove it.

3 **Replace the pump tubing by pushing the new tubing onto the mounting block fittings.**

Install the new tubing carefully. Damage can result if you apply too much force.

4 **Reconnect the pressure shoe.**

Replacing the Sample Probe

You must replace the sample probe if it is leaking or shows other signs of deterioration. To do so, complete the following steps:

1 **Shut down and unplug the Auto Sampler.**

2 **Remove the old sample probe and tubing.**

Be careful not to use excessive force when removing the sample probe. Applying too much force can result in damage to the sample probe assembly.

3 **Remove the old o-ring and replace it with a new o-ring.**

4 **Install the new sample probe.**

For information about installing the sample probe, see Chapter 3, "Installing the SDS-550 System".

5 **With the z-drive assembly in the full-up position, hold the Z-axis slider and move the sample probe tube up and down so that 3 to 6 millimeters extends below the sample probe tube guide plate.**

Replacing the Rinse Station Tubing

If the rinse station tubing is typically exposed to deionized water as a rinsing agent, you do not need to replace it often. However, if you use other rinsing agents, such as acids or solvents, the tubing is likely to deteriorate more rapidly. To replace the rinse station tubing, complete the following steps:

1 **Shut down and unplug the Auto Sampler.**

2 **Move the Auto Sampler arm 20 to 30 centimeters away from the home position by gently pushing it from left to right.**

Moving the Auto Sampler arm ensures that the sample probe will not be damaged while you replace the rinse station tubing.

3 **Disconnect the rinse solution uptake and drain tubing.**

Apply only a linear force when removing the tubing to prevent the fittings from breaking.

4 **Remove the rinse station tube by completing the following steps:**

a **Rotate the rinse station tube counterclockwise 1/4 turn.**

b **Remove the rinse station tube from the mounting block by lifting the tube straight up.**

5 **Replace the rinse station tube by pushing the new rinse station tube into the mounting block and rotating it clockwise 1/4 turn.**

6 **Reconnect the rinse solution uptake and drain tubing.**

Apply only a linear force when replacing the tubing to prevent the fittings from breaking.

7 **Move the Auto Sampler arm back to the home position.**

Replacing the Sample Tray

Cleaning the Auto Sampler sample tray each week extends its life and makes frequent replacement unnecessary. However, if the sample tray needs to be replaced, complete the following steps:

1 **Shut down and unplug the Auto Sampler.**

2 **Remove all sample vial racks.**

3 **Move the Auto Sampler arm 20 to 30 centimeters away from the home position by gently pushing it.**

Moving the Auto Sampler arm ensures that the sample probe assembly will not be damaged while you replace the sample tray.

4 **Raise the rinse station tube approximately 2 centimeters.**

5 **Raise the front edge of the damaged tray at least 2.5 centimeters and slide it forward.**

If you have difficulty removing the sample tray, raise the front edge higher before sliding it forward.

6 **Install the new tray.**

7 **Lower the rinse station tube.**

Ensure the rinse station tube is positioned securely.

8 **Move the Auto Sampler arm back to the home position.**

9 **Replace the sample vial racks.**

Maintaining the Dilution Module

Routine maintenance of the Dilution Module should be incorporated into the regular cleaning of the Auto Sampler. This also includes checking Dilution Module components for leaks or damage.

WARNING

Discharge static buildup and ground to the Dilution Module base or cabinet before performing any maintenance. Do not touch or short-circuit bare contacts or communication ports.

Cleaning the Dilution Module

You should clean the Dilution Module daily after a dilution sequence to prevent damage and extend its working life. It is especially important to clean up spills and remove contaminants from moving parts and surfaces. It may also be necessary to chemically neutralize spills.

Daily External Cleaning

Use of the SDS-550 may result in spills on Dilution Module components. Good maintenance requires that you clean the Dilution Module every day it is used. To do so, complete the following steps:

1 **Shut down both the Auto Sampler and the Dilution Module.**

2 **Wipe the Dilution Module cabinet and exposed components (solenoid valve, sample loop, and syringe assembly) using a towel dampened with a lab-grade cleaning agent.**

CAUTION

Do not allow the cleaning agent to come into contact with the internal syringe assembly mechanism.

3 **Repeat step 2, using a towel dampened with clear water.**

This process removes any remaining contaminants and cleaning agent.

4 **Dry the Dilution Module cabinet and exposed components using a dry towel.**

The Auto Sampler and Dilution Module must be thoroughly dry before you turn the power on.

Daily Rinse of the Syringe Assembly

Good maintenance requires that you rinse the syringe daily to remove diluent residue and prevent contamination.

After completion of a dilution sequence, exchange diluent solution with a rinse of deionized water. In the SDS-550 software, go to the Manual Control page. Follow the instructions on pages 4-10 to 4-13 in Chapter 4, "Verifying Installation", on rinsing the syringe. This action rinses both the syringe and the Auto Sampler probe.

The Solenoid Valve

The solenoid valve has three ports for liquid connections. You should daily inspect the ports for any sign of leakage. Electrical connections to the valve are inside the Dilution Module cabinet. In case of valve failure, contact CETAC Customer Service.

Replacing the Sample Loop

The sample loop is attached between the solenoid valve and the syringe assembly. A screw-in spool (with a white-colored end) secures the sample loop. You should daily inspect the sample loop for leaks or damage. To replace a sample loop, complete the following steps:

1 **Complete the procedure for rinsing the syringe with deionized water.**

   See above in "Daily Rinse of the Syringe Assembly". This action will remove any diluent and/or sample residue in the sample loop before the loop's removal.

2 **Shut down both the Auto Sampler and the Dilution Module.**

3 **Unscrew the two sample loop fittings which attach to the solenoid valve and the syringe assembly.**

4) **Turn the end of the spool counter-clockwise until it releases from the dilution module.**

   Remove the sample loop from the spool.

5) **Place the new sample loop on the spool and reattach the spool to the dilution module.**

6) **Attach one end of the sample loop to the middle (side) solenoid valve port and the other end to the left side of the syringe assembly.**

The Syringe Assembly

The syringe assembly consists of two main components: a valve at the top and the syringe cylinder and plunger below. The valve will switch to allow the uptake of sample, reagent or diluent solution. The valve is controlled by a motor inside the dilution module cabinet. In case of valve failure, contact CETAC Customer Service.

The syringe cylinder and plunger may need replacement in case of leakage or damage. The syringe replacement procedure differs depending on whether you have an older syringe without a shield, or a newer syringe with a shield.

Replacing the Syringe Cylinder and Plunger (SDS-550 Models With a Shield)

1) **Rinse the syringe with deionized water as described in "Daily Rinse of the Syringe Assembly" in this chapter.**

2) **Remove the diluent uptake line from the container of deionized water.**

3) **Go to the Manual Control page of the SDS-550 Software.**

4) **Change the diluent volume to 10.00mL and click load.**

   This action will lower the plunger its full length of travel.

5) **Shut down and disconnect power to the dilution module.**

6) Unscrew the top end of the syringe from the diverter valve, then push the body of the syringe down.

Figure 6-2. Disconnecting the top of the syringe.

7) Remove the screw from the shield.

Figure 6-3. Removing the shield.

8) Tilt the syringe to the side and lift the syringe body until the syringe is fully extended.

Figure 6-4. Lifting the syringe body.

9) Tilt the bottom of the shield away from the syringe module, then lift the shield to expose the knurled screw which attaches the syringe plunger to the drive mechanism. Remove the knurled screw.

Figure 6-5. Removing the screw from the plunger.

10) Replace or repair the syringe.

Figure 6-6. Syringe with plunger.

11) Reverse the steps to reassemble the syringe. The two screws should be tightened only until snug; over-tightening may cause equipment damage.

Replacing the Syringe Cylinder and Plunger (SDS-550 Models Without a Shield)

12) Rinse the syringe with deionized water as described in "Daily Rinse of the Syringe Assembly" in this chapter.

13) Remove the diluent uptake line from the container of deionized water.

14) Go to the Manual Control page of the SDS-550 Software.

15) Change the diluent volume to 10.00mL and click load.

This action will lower the plunger its full length of travel.

16) Shut down and disconnect power to the dilution module.

17) Remove syringe cover screw and slide cover up.

18) Remove the knurled retaining screw at the bottom of the plunger. (Figure 6-7)

Figure 6-7. Removal of retaining screw.

19) Move the plunger forward and off its support mounting. Then pull the plunger out of the syringe cylinder. (Figure 6-8).

Figure 6-8. Removal of plunger from syringe.

20) The syringe cylinder may be removed by turning the top of the cylinder near the Kel-F® valve clockwise. (Figure 6-9)

Figure 6-9. Removal of syringe cylinder.

21) To install a new syringe cylinder and plunger, insert the plunger into the cylinder so that only the Teflon®[1] top of the plunger is inserted into the glass.

22) Reattach the top of the cylinder to the bottom of the Kel-F® valve. Then place the end of the plunger on its support mounting and replace the knurled retaining screw.

[1] Teflon is a registered trademark of E.I. du Pont de Nemours.

7

Troubleshooting the SDS-550 System

Troubleshooting the SDS-550 System

The SDS-550 is both easy to operate and reliable. However, problems with it may occur. When the SDS-550 does not function properly, try to isolate the problem to determine if it originates in the host computer, the Auto Sampler, or the Dilution Module. If you determine the problem is in the Auto Sampler, check the power system, the communications interface, or the sample probe assembly to find the cause of the problem and resolve it. If the problem is with the Dilution Module, also check the power system and communications interface.

This chapter explains how to troubleshoot SDS-550 problems. If you cannot solve a problem using the steps given in this chapter, contact CETAC Technologies Customer Service and Support.

Power System Problems

A possible cause of SDS-550 malfunction is a problem in the power system. If the Auto Sampler and/or Dilution Module are not responsive, there may be no power supplied. If this is the case, the green LED power indicator on the Auto Sampler and/or Dilution Module would be off. To troubleshoot this problem, complete the following steps:

1 **Check the wall outlet and see if the external power supplies for both the Auto Sampler and Dilution Module are plugged in.**

Interface Problems

Operation of the SDS-550 is directed by the host computer. A malfunction of the Auto Sampler/Dilution Module can indicate a problem with the RS-232 cables or with the configuration of the software on the host computer. The following sections explain how to troubleshoot these problems.

RS-232 Cable Problems

The first step in troubleshooting interface problems is to check the RS-232 cables. To do so, complete the following steps:

1 **Check the power switches to ensure they are both on.**

2 **Check one RS-232 cable to ensure it is plugged in to the COM1 port on the Auto Sampler.**

If the cable is plugged in, ensure that it is tightened properly.

3 **Check the host computer to ensure that the RS-232 cable is connected to the appropriate COM port.**

If the cable is plugged in, ensure that it is tightened properly. For more information about connecting the RS-232 cables, see Chapter 3, "Installing the SDS-550 System".

4 **Check the second RS-232 cable to ensure that it is securely connected between the Auto Sampler Dilutor port and the Dilution Module Syringe port.**

5 **Check the Solenoid Control cable to ensure that it is securely connected between the Auto Sampler auxiliary port and the Dilution Module Solenoid port.**

Software Configuration Problems

If the RS-232 cables are connected properly and the SDS-550 is still not communicating with the host computer, ensure that the host software is configured correctly. To do so, complete the following steps:

1 **Run the host software and ensure that the instrument is functioning properly.**

2 **Check the software configuration for the correct COM port selection and baud rate (9600, N, 8, 1).**

If the wrong port or baud rate is selected, change the configuration. For information about changing the software configuration, see Chapter 4, "Verifying Installation".

Z-Drive Assembly Problems

An Auto Sampler malfunction may be caused by a problem in the z-drive assembly. You can easily determine that a malfunction is related to the z-drive assembly if you hear a loud chattering noise when the Auto Sampler power switch is on or if the sample probe is not moving. To troubleshoot z-drive assembly problems, complete the following steps:

1 **Ensure that the Y-axis slider block and z-drive assembly are installed.**

If the z-drive assembly is not installed, follow the instructions provided in Chapter 3, "Installing the SDS-550 System," to install it. If the z-drive assembly is already installed, continue with step 2.

2 **Check the Y-axis block home position flag for damage.**

The home position flag is shown in Figure 7–1. If the flag is damaged, you must replace the entire slider block. For information about mounting the slider block on the Auto Sampler arm, see Chapter 3, "Installing the SDS-550 System".

If the home position flag is undamaged, continue with step 3.

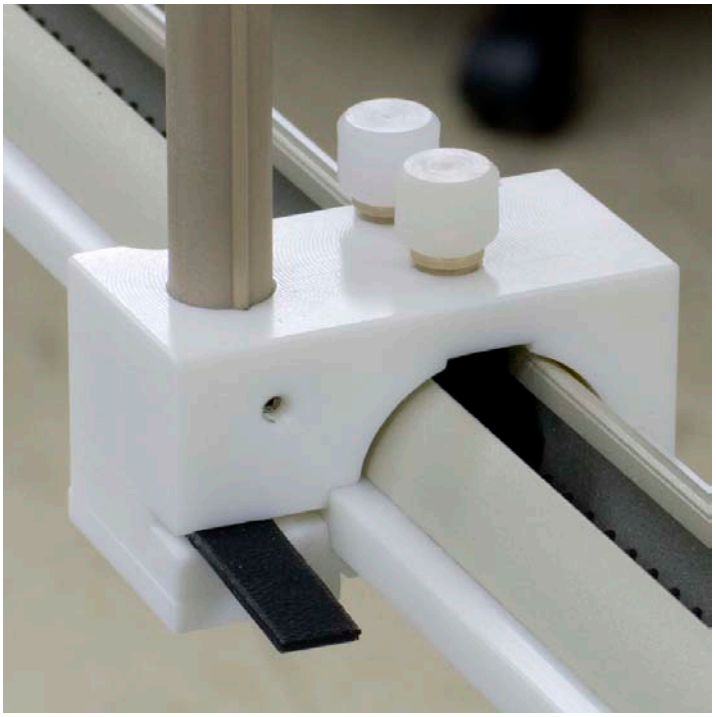

Figure 7–1. Z-Drive Assembly with Y-Axis Block Home Position Flag.

3 **Check that the sample probe is moving.**

If the sample probe is binding, free the sample probe assembly.

> **Note:**
>
> If you cannot free the z-drive assembly, you will need to replace it. See Chapter 3, "Installing the SDS-550 System," for information about mounting a new z-drive assembly. You can order a new z-drive assembly from CETAC Technologies.

Syringe Assembly Problems

Syringe problems may include low liquid (sample, reagent, or diluent) uptake and stoppage (seizure) of the syringe plunger.

1 **Check all liquid lines and connections for leaks.**

2 **Check the Auto Sampler probe for damage or blockage.**

Replace the probe if necessary.

3 **Ensure that the diluent and reagent lines are immersed in their respective solutions.**

4 **If the syringe has stopped during a cycle, attempt to retract the syringe plunger to its full down position. Go to the Manual Control page in the SDS-550 software. Enter an estimated diluent uptake volume from the plunger position in the cylinder and load deionized water into the syringe. Dispense and reload with deionized water to flush the syringe.**

5 **If the plunger will not move at all, contact CETAC Customer Service and Support.**

Glossary

Glossary

This glossary defines the terms used in the *SDS-550 Sample Dilution System Operator's Manual.*

Auto Sampler arm The arm that extends from the front of the Auto Sampler cabinet. It governs the left / right and forward / backward travel of the sample probe assembly.

host computer The computer which controls the operation of the SDS-550 System.

I/O ports The connections used for establishing communication between the the host computer, the Auto Sampler, and the Dilution Module.

peristaltic pump The on-board pump controlling the movement of the rinse solution to the rinse station.

rinse solution The solution, typically deionized water, used to clean the sample probe.

rinse station The Auto Sampler component used to clean the sample probe with a rinse solution.

sample probe The tube that moves the sample from the sample vial to the Dilution Module.

solenoid valve This valve, mounted on the Diluton Module, allows the addition of one reagent to the diluted sample.

syringe assembly The syringe assembly will uptake a set volume of sample, reagent, and/or diluent.

Y-axis slider block The component that fits over the Auto Sampler arm and executes the forward/backward movement of the sample probe assembly along the Auto Sampler arm.

Z-axis rotor The component that controls the movement of the Z-axis slider.

Z-axis slider The sample probe assembly component that governs the up-and-down travel of the sample probe.